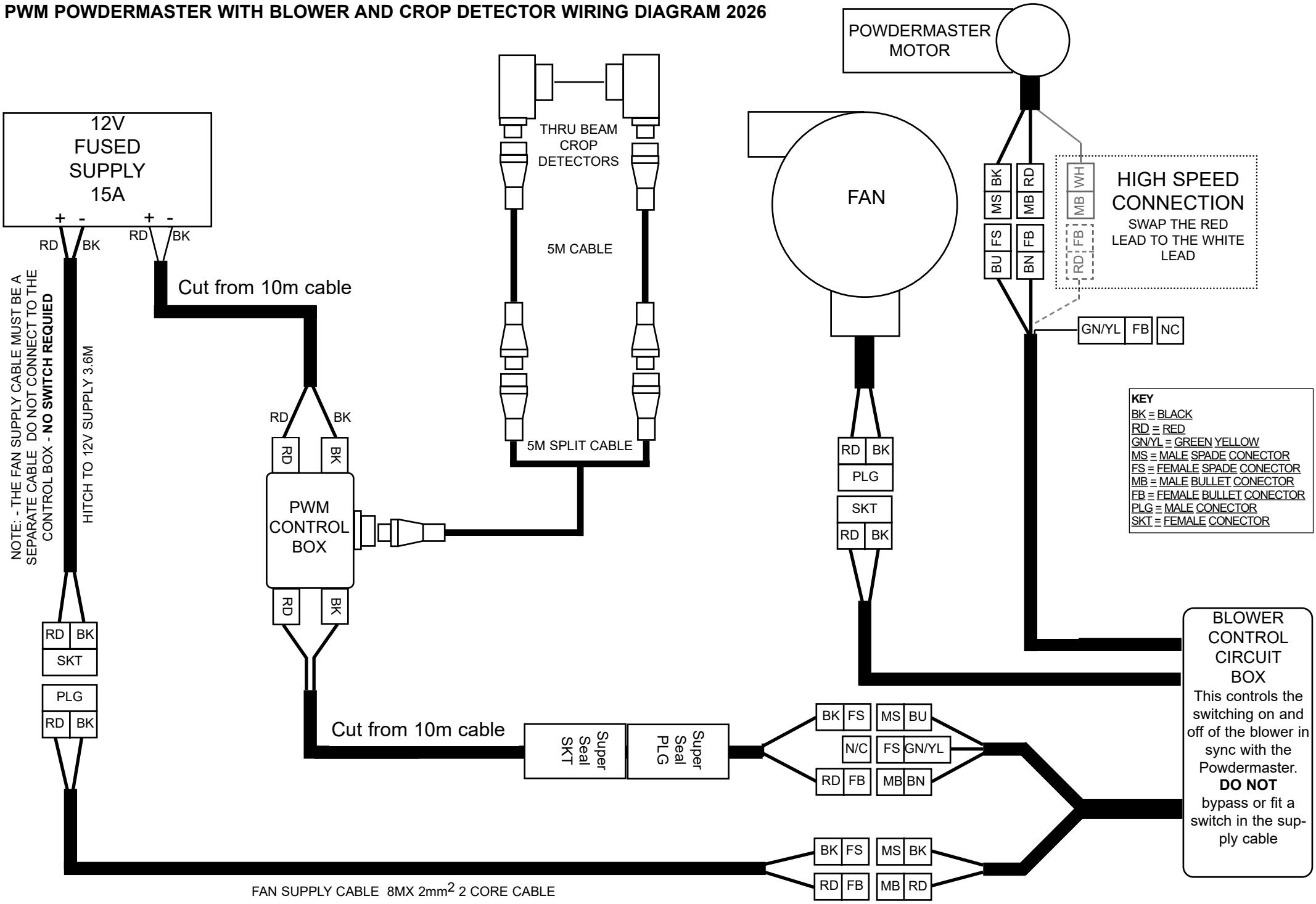PWM POWDERMASTER WITH BLOWER AND CROP DETECTOR WIRING DIAGRAM 2026